ATK-CLAM62LB

User Reference Manual

V1.0

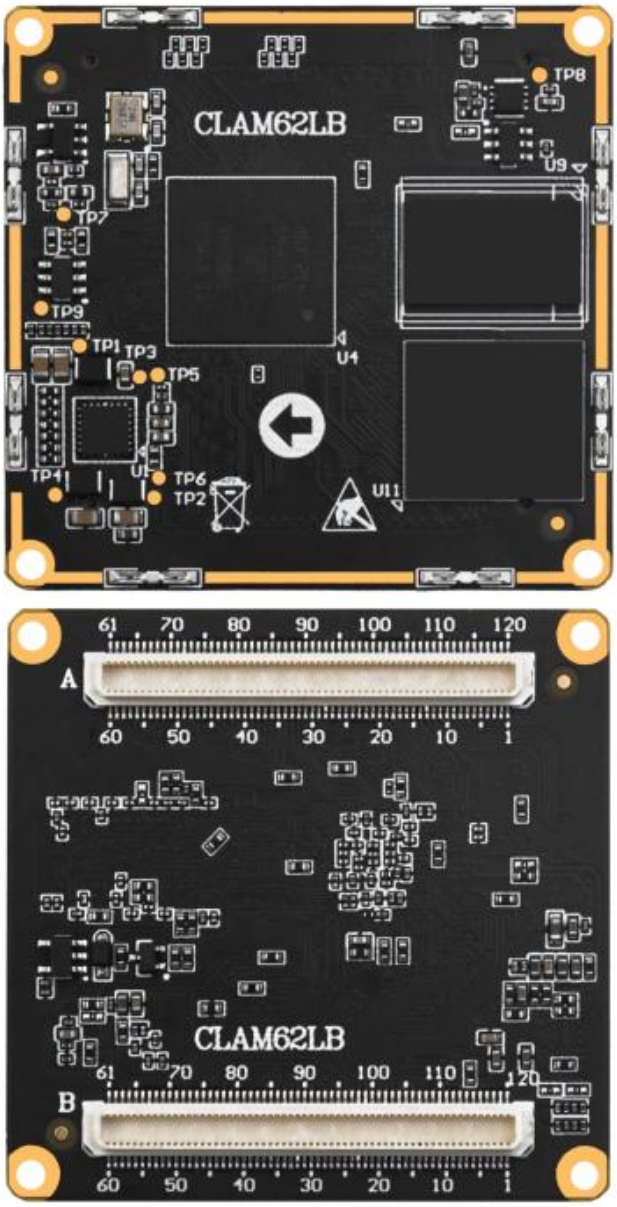

ALIENTEK

1. Shopping:

TMALL: https://zhengdianyuanzi.tmall.com

TAOBAO: https://openedv.taobao.com

2. Download

Address: http://www.openedv.com/docs/index.html

3. FAE

Website : www.alientek.com

Forum : http://www.openedv.com/forum.php

Videos : www.yuanzige.com

Fax : +86 - 20 - 36773971

Phone : +86 - 20 - 38271790

Disclaimer

The product specifications and instructions mentioned in this document are for reference only and subject to update without prior notice; Unless otherwise agreed, this document is intended as a product guide only, and none of the representations made herein constitutes a warranty of any kind. The copyright of this document belongs to Guangzhou Xingyi Electronic Technology Co., LTD. Without the written permission of the company, any unit or individual shall not be used for profit-making purposes in any way of dissemination.

In order to get the latest version of product information, please regularly visit the download center or contact the customer service of Taobao ALIENTEK flagship store. Thank you for your tolerance and support.

Revision History:

Version	Version Update Notes	Responsible person	Proofreading	Date
V1.0	release officially	ALIENTEK Linux Team	ALIENTEK Linux Team	2026.03.01

Catalogue

Brief 1
Overview 1
Product Model 1
Target Users 1
Development Environment 1
Chapter 1. Core board overview 2
1.1 Overview 2
1.2 AM62L Chip Functional Block Diagram 3
1.3 Core Board Dimension Drawing 4
1.4 Core Board Multiplexing Function Description 4
1.4.1 Default Pin Configuration of the Core Board Factory System 4
1.4.2 Core Board Pin Multiplexing Resources 7
Chapter 2. Core Board Resources 9
2.1 CPU 9
2.2 RAM 9
2.3 ROM 9
2.4 PMIC 9
2.5 BTB Connector Models 9
2.5.1 Core Board Connector 9
2.5.2 Base Board Connector 9
Chapter 3. Minimum System Design Recommendations 10
3.1 System Power Supply Design 10
3.1.1 Core Board Power-On Information Description 11
3.2 Boot Mode Circuit Design 12
3.3 Reset Circuit Design 14
3.4 UART Debug Interface Circuit Design 15
3.5 TF-CARD Interface Circuit Design 15
3.6 Design Notes 16
Chapter 4. Power Supply Voltages on the Core Board 17
4.1 Voltages at Test Points of the BTB Core Board 17
Chapter 5. Precautions for Using the Core Board 18
Precautions 18
Chapter 6. Common Causes of Core Board Damage 19

Brief

Overview

This document mainly introduces the key points and precautions for secondary development and design using the ALIENTEK ATK-CLAM62LB core board, including hardware design and software modification. It is intended to help customers shorten product design cycles, improve design stability, and reduce failure rates.

This document is for reference only. If peripherals are modified for special reasons, the design must be carried out in strict accordance with high-speed digital circuit design requirements. When developing with the core board, it is recommended to flash the latest factory system image.

Product Model

The core board model corresponding to this document is: ALIENTEK ATK-CLAM62LB Core Board (hereinafter referred to as the core board).

Target Users

This document is mainly intended for the following engineers:

- Product hardware development engineers
- Product driver development engineers
- Test engineers

This document is designed and explained based on the principle of the ATK-DLAM62LB development board, aiming to reduce the difficulty of development and design for enterprise users and shorten the development cycle. Users shall conduct design according to their own development capabilities and actual project requirements. This document shall not be held responsible for any consequences of development and design and is for reference only.

Due to the editors' limited knowledge, if any typos or ambiguous contents are found in this document, please contact the editor via QQ: 820562576 for correction.

Development Environment

Windows 10, Ubuntu 22 virtual machine

Chapter 1. Core board overview

1.1 Overview

The ATK-CLAM62LB Core Board is a low-power, cost-effective industrial core board designed by ALIENTEK based on Texas Instruments' AM62L chip (dual ARM Cortex-A53 processor).

The main processor unit, ARM Cortex-A53, operates at a frequency of up to 1.25GHz and adopts a 16nm process. It is an entry-level application processor with low power consumption and high cost-performance ratio launched by Texas Instruments in 2025. It supports RGB and MIPI DSI display interfaces, as well as a wide range of peripherals. It is suitable for scenarios such as industrial control, human-machine interface (HMI), network management equipment, medical and retail terminals.

ALIENTEK adopts BTB connector interface for both the ATK-CLAM62LB Core Board and the base board. It is rich in peripheral resources and supports interfaces including I2C, SPI, CAN, Ethernet, UART, MIPI DSI, RGB, McASP, USB2.0 and ADC.

The ATK-CLAM62LB Core Board has a compact form factor of 45mm*43mm. It uses a 0.5mm pitch SMD board-to-board connector with a stacking height of 3mm when mated with the base board's BTB connector, making it easy to apply to various projects.

1.2 AM62L Chip Functional Block Diagram

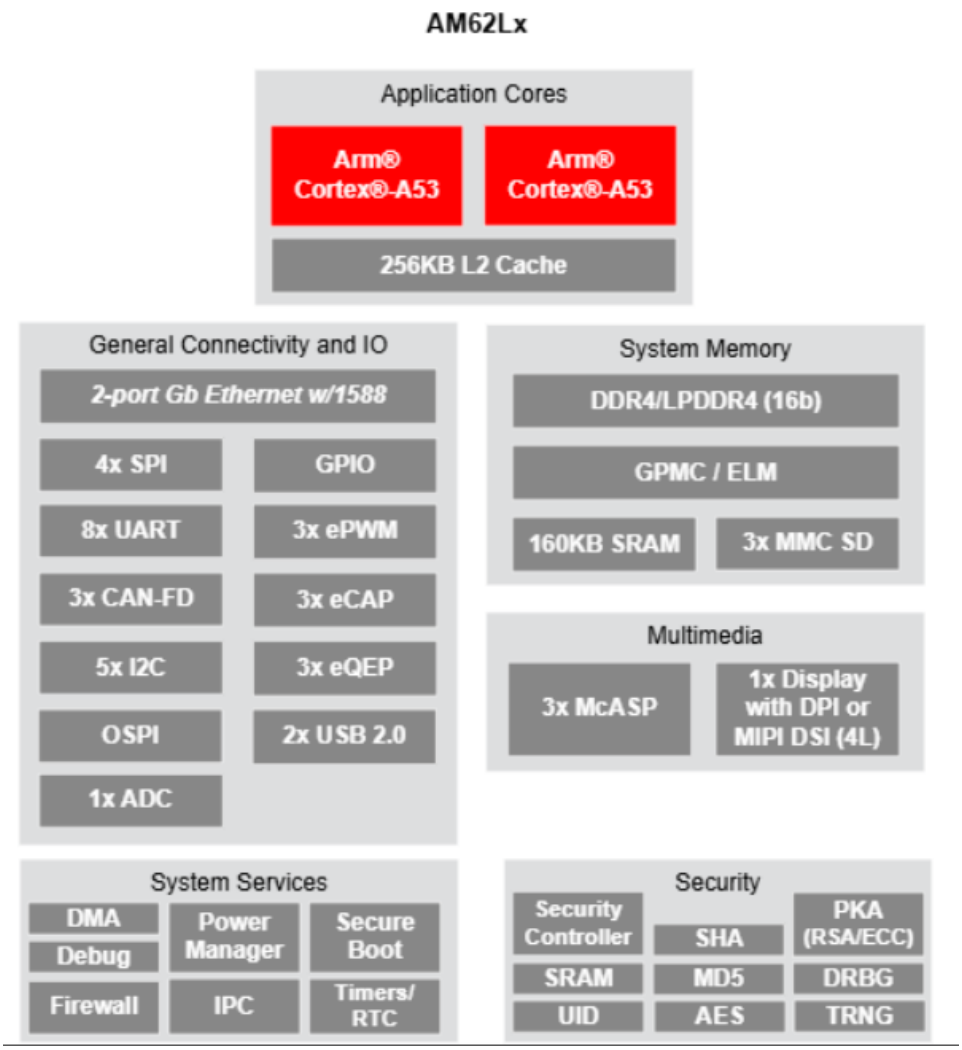

Figure 1.2-1 AM62Lx Chip Resource Diagram

1.3 Core Board Dimension Drawing

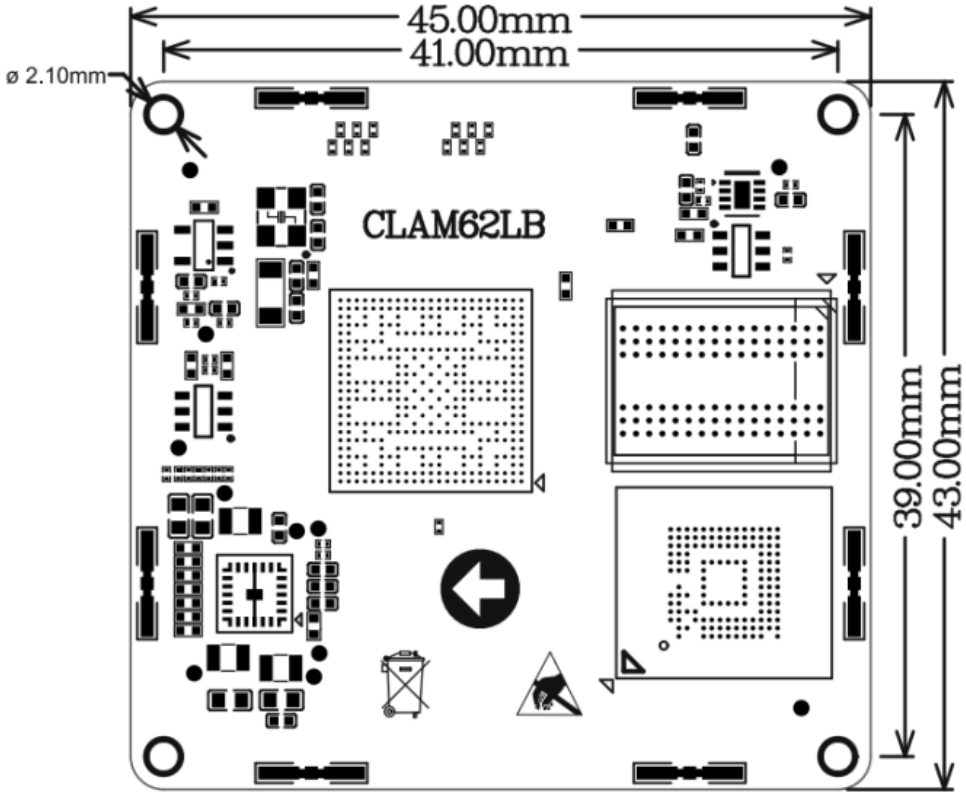

Figure 1.3-1 Core Board Dimension Drawing

1.4 Core Board Multiplexing Function Description

1.4.1 Default Pin Configuration of the Core Board Factory System

Pin Definition in the Core Board Schematic Diagram:

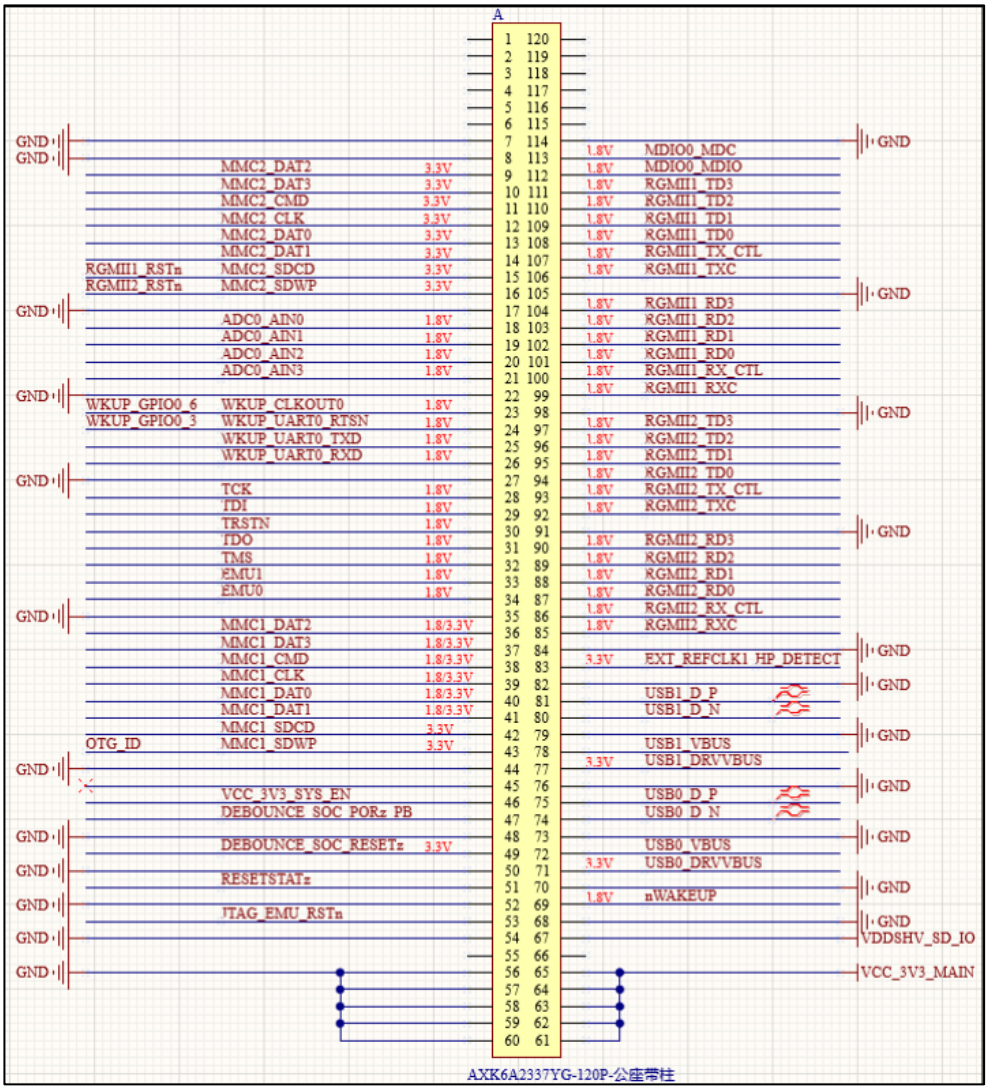

Figure 1.4-1 BTB Connector A

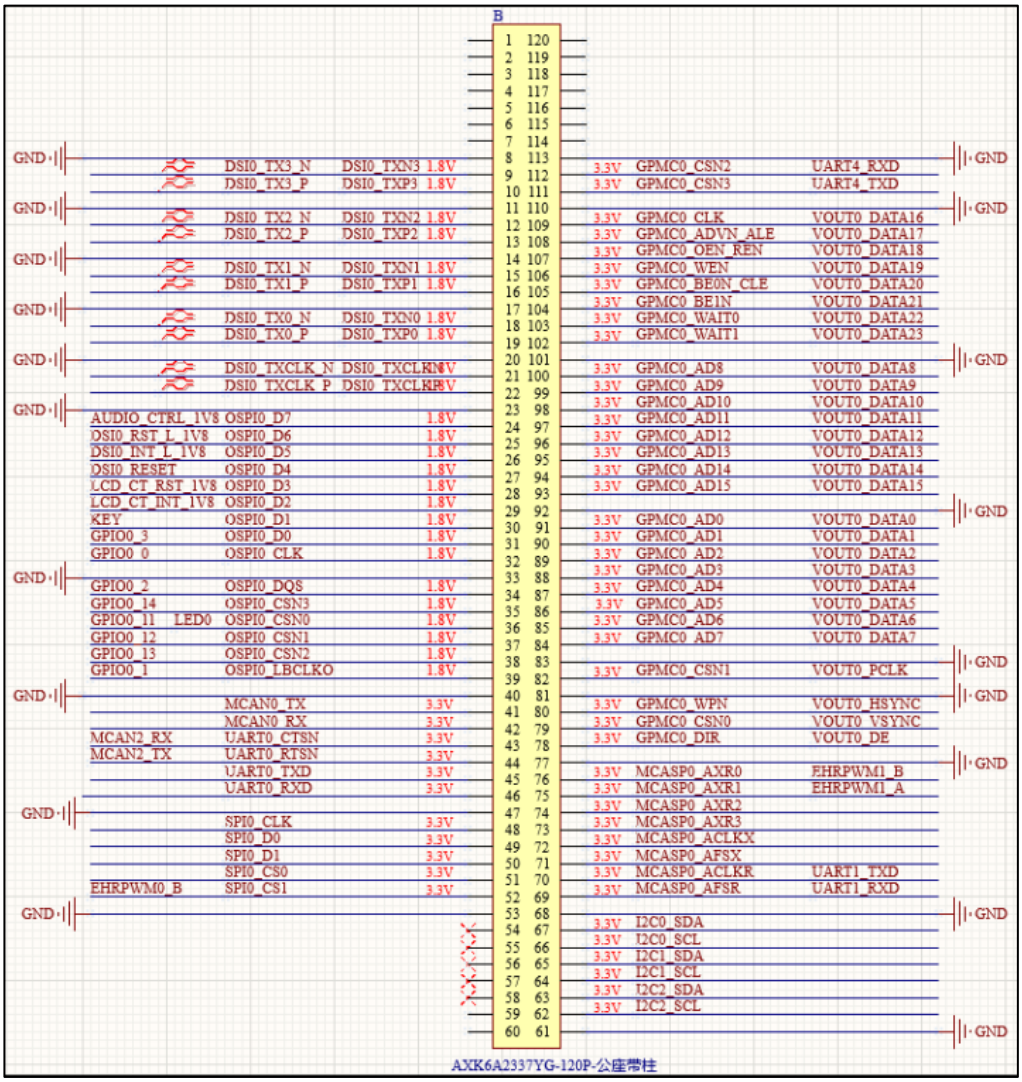

Figure 1.4-2 BTB Connector B

Pin Functions in Default Factory System Configuration:

Table 1.4.1 Default Configuration Signals in Factory System

Peripheral Function	Quantity	Remarks
Ethernet Port	2	Two Gigabit Ethernet ports are led out via RJ45 connectors.
Debug Serial Port	1	
McASP	1	Connect to the ES8390 audio chip.
RGB	1	Supports ALIENTEK 4.3/7.0/10.1-inch RGB screens.
MIPI DSI	1	Supports ALIENTEK 5.5/10.1-inch MIPI screens.
USB HOST	1	Expands two USB HOST interfaces.
USB OTG	1	
MMC	2	One channel is used for the SD card, and the other is led out through pin headers.
RS-485	2	
CAN	2	
JTAG	1	

RTC	1	
4G	1	Supports GOSUNCN ME3630 / Quectel EC20
ePWM	3	
GPIO	Multi-channel	
ADC	4	

1.4.2 Core Board Pin Multiplexing Resources

According to peripheral functions, the maximum number of available resources for a single peripheral on the ATK-CLAM62LB core board is listed here. Specific selection can be made in conjunction with the chip datasheet. The following references are from the AM62L chip datasheet (maximum resources for a single peripheral: refers to the maximum quantity of a certain single peripheral that the core board can use without employing other peripherals).

Table 1.4.2 Core Board Pin Multiplexing Resources Table

Functional Interface	Maximum Quantity	Performance Parameters
MIPI DSI	1	- Up to 4 channels supported; - Maximum resolution of 1920×1080@60fps supported
RGB	1	24-bit parallel interface, supporting a maximum resolution of 1920×1080@60fps.
Ethernet	2	- RMII (10/100) or RGMII (10/100/1000); - IEEE 1588 (Annexes D, E and F, and 802.1AS PTP); - Priority-based flow control; - IP/UDP/TCP checksum offload in hardware;
GPMC	1	- 16-bit parallel bus supporting 133 MHz clock; - Flexible 8-bit and 16-bit asynchronous memory interface with up to four chip selects; - Support for 16-bit multiplexed address/data bus scheme;
USB2.0	2	Port configurable as USB host, USB device, or USB dual-role device (DRD mode); USB 2.0 (up to 480 Mbps); Integrated USB VBUS detection;
MMC	2	Compliant with eMMC 5.1, SD 3.0 and SDIO Version 3.0; MMC0 supports 1-, 4-, and 8-bit MMC modes and supports HS200.
UART	8	Supports baud rates up to 3.6 Mbps; All channels support RTS and CTS flow control; Supports automatic flow control for external RS-485 transceivers;
McASP	3	- Transmit and receive clocks up to 50 MHz; - Up to 4/6/16 serial data pins on 3 McASP modules with independent TX and RX clocks; - Supports Time Division Multiplexing (TDM), Inter-IC Sound (I2S) and similar formats;

		- Supports digital audio interface transmission (SPDIF, IEC60958-1 and AES-3 formats);
CAN	3	Supports CAN-FD (up to 64 data bytes); Supports CAN 2.0A, B protocols and ISO 11898-1 standard; Speed up to 8 Mbps;
I2C	5	Supports standard mode (up to 100 Kbps) and fast mode (up to 400 Kbps).
SPI	4	Each channel features a serial clock with programmable frequency, polarity, and phase. The MCSPI controller clock rate is up to 50 MHz.
OSPI/QSPI	1	Supports serial NAND and serial NOR flash devices; Supports up to 4GB memory address space;
ePWM	3	Up to 3 PWM outputs are supported. Each channel supports two ePWM outputs (ePWMxA and ePWMxB), and each PWM channel features a dedicated 16-bit time-base counter for period and frequency control.
eCAP	3	Up to 3 eCAP inputs or PWM outputs are supported.
eQEP	3	Up to 3 eQEP inputs are supported.
ADC	4	12-bit analog-to-digital converter; Maximum sampling rate up to 4 MSPS; 4 analog input channels (operating in time-multiplexed mode);
JTAG	1	

Note:

The above peripheral data is based on the AM62L chip datasheet. Whether peripheral functions conflict needs to be evaluated according to actual projects. The combination of peripheral functions for specific core board pins can be carried out with reference to the *ATK-CLAM62LB Core Board Interface Datasheet*.

Chapter 2. Core Board Resources

2.1 CPU

The CPU used on the core board is AM62L32, in FCCSP373 package. The chip operating temperature range is -40°C ~ 105°C, with 373 pins and dimensions of 11.9mm × 11.9mm.

2.2 RAM

The core board connects one DDR4 chip via a dedicated DDR bus, using a 16-bit data bus. It supports DDR4-1600 operating mode (800MHz).

2.3 ROM

The core board connects an eMMC device via the MMC0 bus, using an 8-bit data bus.

2.4 PMIC

The core board adopts a PMIC power solution specially designed by Texas Instruments (TI) for this series of SoCs, so as to meet the stringent operating requirements of industrial-grade environments. The core board is powered by a 3.3V DC power supply, which satisfies the power demand for its normal operation. The power system design meets the power supply as well as power-on and power-down timing requirements of the CPU.

2.5 BTB Connector Models

2.5.1 Core Board Connector

Model of the core board connector: AXK6A2337YG, male connector, 120 pins, pitch 0.5mm.

2.5.2 Base Board Connector

Model of the base board connector: AXK5A2137YG, female connector, 120 pins, pitch 0.5mm, mating height 3.0mm.

Chapter 3. Minimum System Design Recommendations

3.1 System Power Supply Design

The on-board power supply circuit of the ATK-DLAM62LB development board is shown in the following figure. The development board is powered by a DC 12V/1A power adapter. The main power input from DC_IN first passes through a voltage regulator circuit, and then is converted to VCC_3V3_MAIN via the SCT2230 chip to supply power to the core board.

VCC_3V3_MAIN is input to the core board. After the PMIC powers on, it outputs an enable signal through VCC_3V3_SYS_EN, thereby controlling the 3.3V voltage VCC_3V3_SYS output to the base board, which in turn controls the enable of VCC5V0_SYS.

Powering on the core board must comply with specific power-on timing requirements to start up normally. The power supply design of the base board can directly refer to the power supply section of the development board schematic.

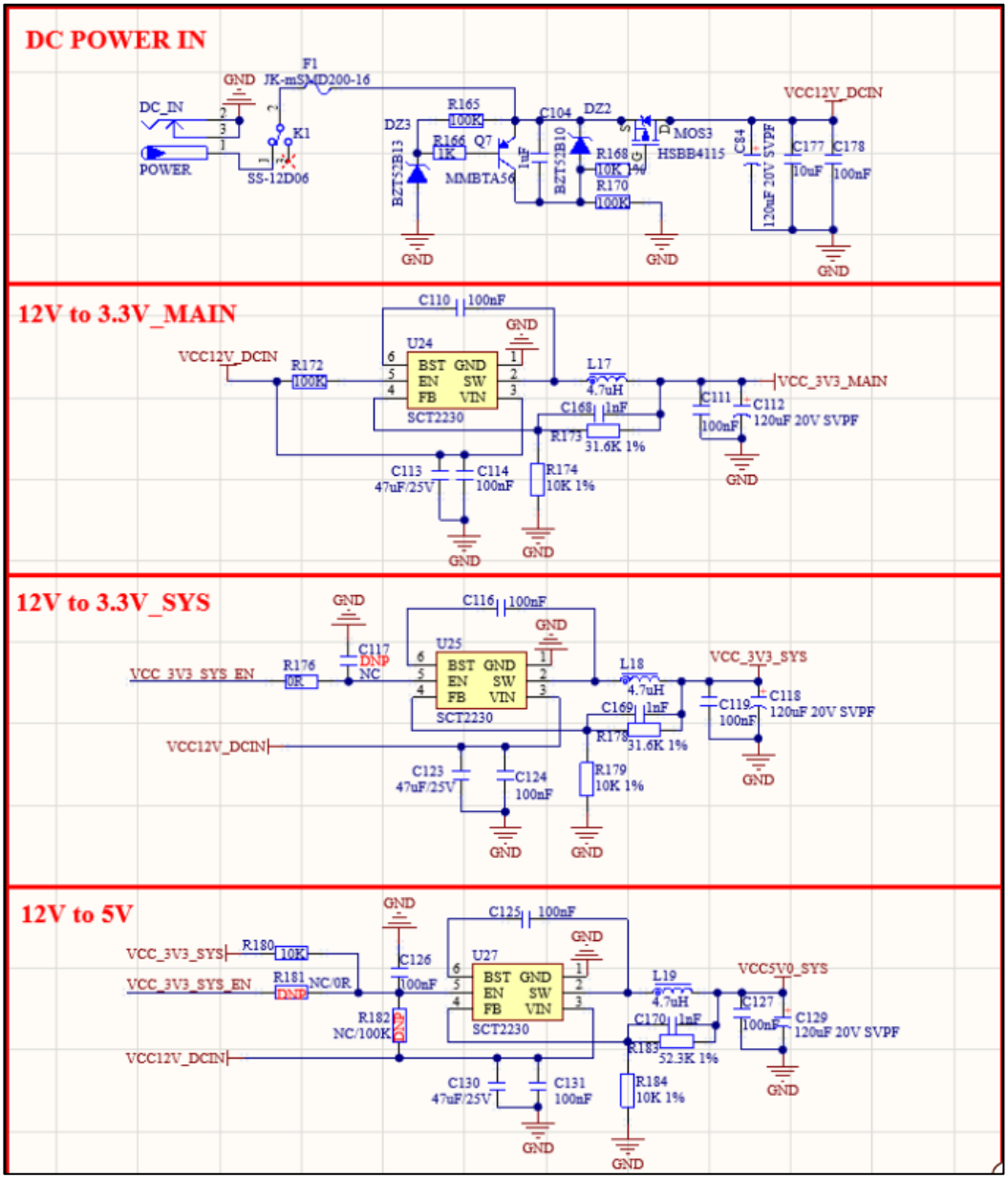

Figure 3.1-1 Schematic Diagram of the Power Supply Section

3.1.1 Core Board Power-On Information Description

VCC_3V3_MAIN is the system power supply for the core board. When designing the base board, ensure that the base board powers on after the core board to prevent current backflow from affecting system startup.

Before integrating the ATK-CLAM62LB core board into a customer's own product base board, the customer must test the reliability of the product base board. This includes verifying that the power input to the core board is normal, there are no short circuits or cold solder joints on the base board, no current backflow from peripherals on the base board, and that the logic levels of the base board's peripheral pins comply with the relevant power domains of the ATK-CLAM62LB core board, so as to ensure normal circuit operation and effective soldering workmanship.

3.2 Boot Mode Circuit Design

The boot mode configuration port circuit of the ATK-DLAM62LB development board is shown in the following figure. Note that the pull-up level for these pins is provided by VCC_3V3_MAIN.

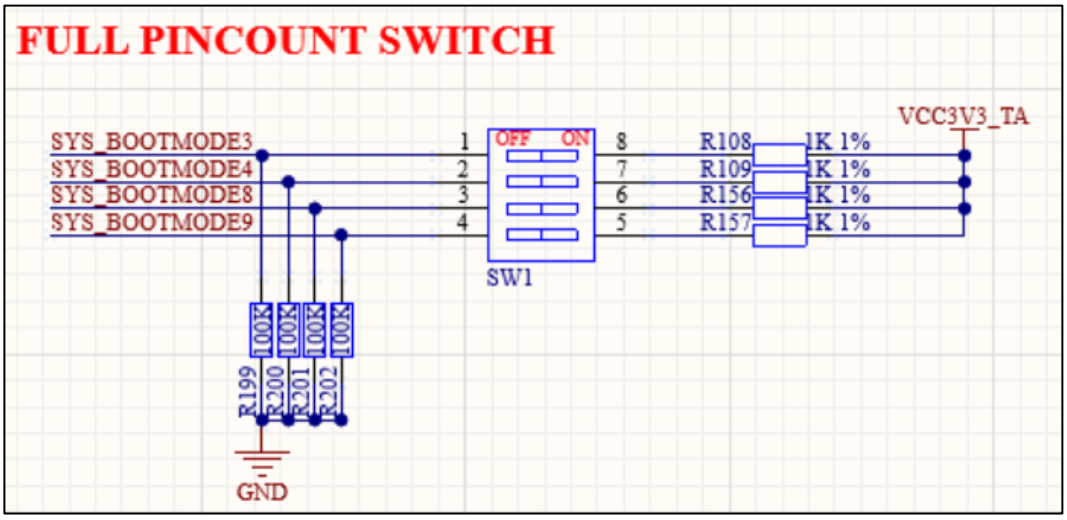

Figure 3.2-1 FULL PINCOUNT mode

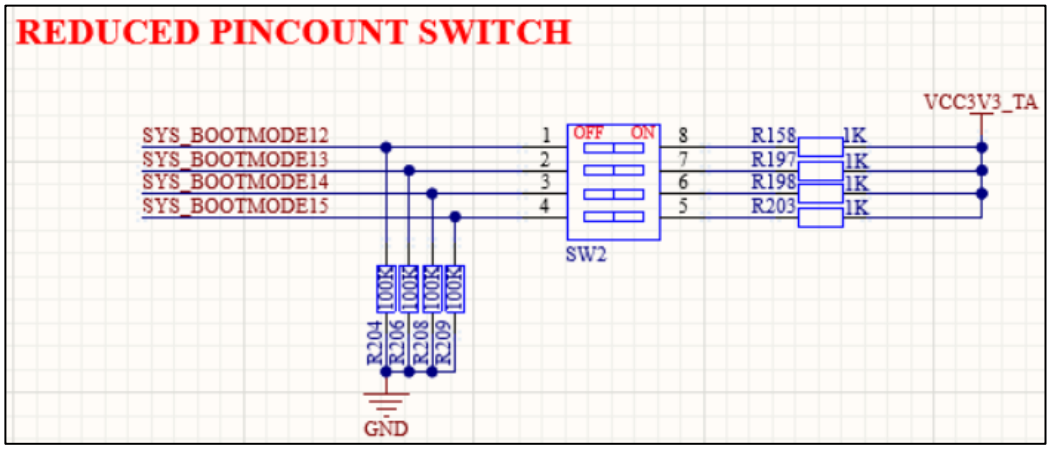

Figure 3.2-2 REDUCED PINCOUNT mode

The ATK-DLAM62LB development board supports two different boot pin selection modes: FULL PINCOUNT mode and REDUCED PINCOUNT mode.

In FULL PINCOUNT mode, all boot pins BOOTMODE[0:15] require pull-up or pull-down configuration. In REDUCED PINCOUNT mode, only four boot pins BOOTMODE[12:15] need to be configured.

These two modes do not interfere with each other.

For both modes, it is necessary to ensure that the levels of the corresponding BOOTMODE pins are not disturbed by external devices during the CPU power-on initialization process; otherwise, the CPU may fail to boot normally.

The AM62L supports booting from a variety of different devices, and the desired boot device can be selected by setting the DIP switches.

FULL PINCOUNT mode corresponds to the SW1 DIP switch on the base board (the remaining pins are connected to pull-up or pull-down resistors on the base board).

When using this mode, all switches on the SW2 DIP switch must be set to 0.

启动模式(SW1)	M3	M4	M8	M9
USB(DFU)	0	1	0	1
USB(HOST)	0	1	1	1
MicroSD	0	0	0	1
EMMC(UDA)	0	0	0	0
EMMC(BOOT)	1	0	0	0

REDUCED PINCOUNT mode corresponds to the SW2 DIP switch on the base board.

启动模式(SW2)	M12	M13	M14	M15
EMMC(BOOT)	0	0	0	1
MicroSD	0	1	0	1
UART	0	1	1	1
USB0 DFU	1	1	1	1

The ATK-DLAM62LB development board by ALIENTEK supports three boot modes: USB, SD card, and eMMC.

When the boot pins are multiplexed for other functions, such as RGB function, a buffer must be added between the DIP switches and the chip to isolate the influence of the DIP switch levels on the RGB signals.

You may refer to the **FULL/REDUCED PINCOUNT BUFFER** section in the development board schematic.

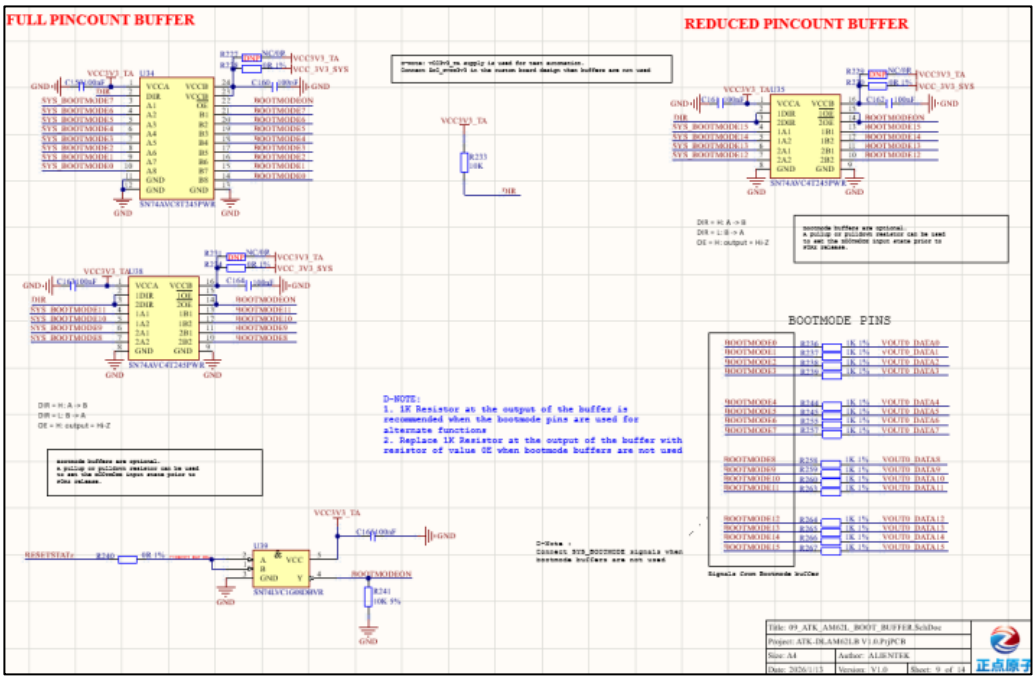

Figure 3.2-3 Boot Pin Buffer

3.3 Reset Circuit Design

The reset circuit of the ATK-DLAM62LB development board is shown in the following figure:

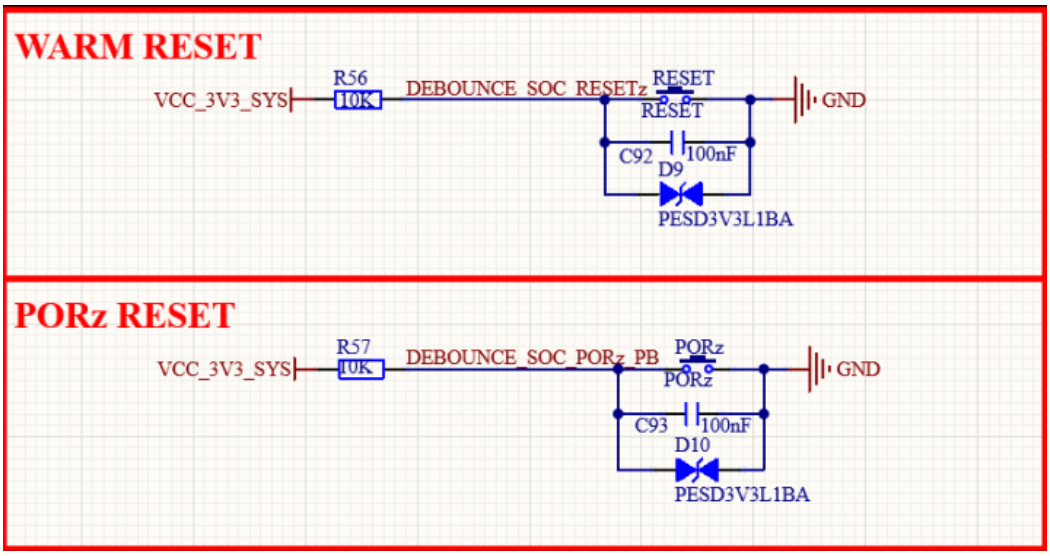

Figure 3.3-1 Reset Circuit

WARM RESET is a "soft" reset signal (active low), mainly used to reset the main domain of the SoC, including the CPU, memory controller and some peripherals, without interrupting the power supply of the entire power domain. PORz RESET is a "hard" reset signal (active low), which resets the entire SoC and all its peripherals, including the main domain and power domain.

3.4 UART Debug Interface Circuit Design

The ATK-DLAM62LB development board integrates a USB-to-UART port, whose schematic diagram is shown in the following figure:

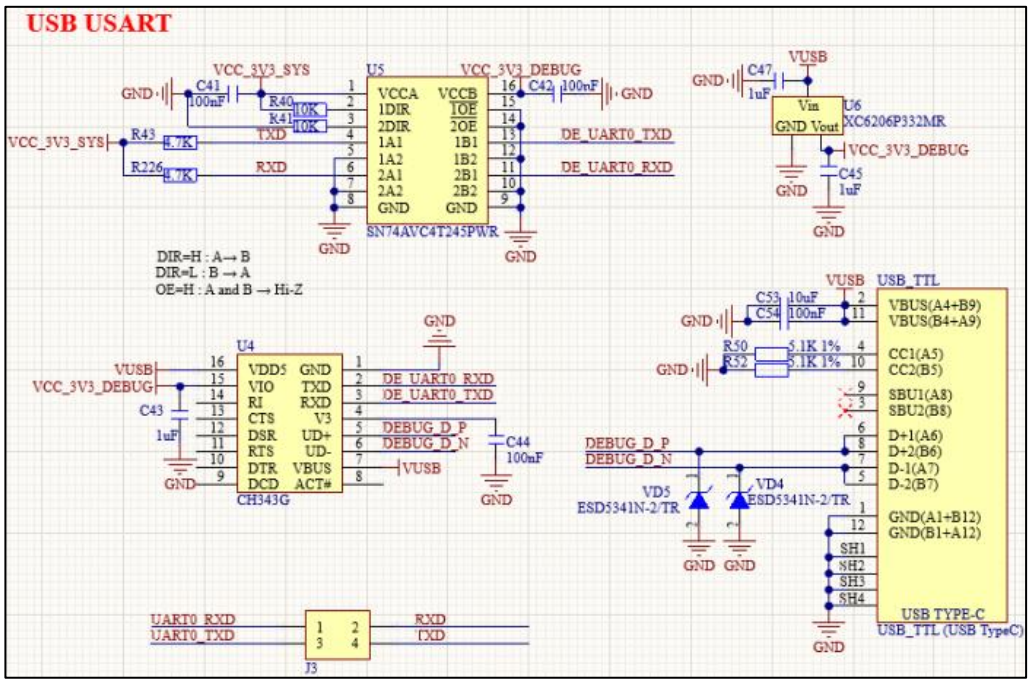

Figure 3.4-1 USB-to-UART Port

The debug UART interface on the development board uses a Type-C connector and connects to a computer via a USB-to-Type-C cable. In the diagram, U4 is the CH343G, a USB-to-UART chip, which converts the CPU's UART0 signals to USB signals and connects them to the USB_TTL interface. U5 is an isolation chip used to prevent UART signal current from flowing back to the core board when the core board is not powered on, which would affect its startup.

3.5 TF-CARD Interface Circuit Design

The TF card interface of the ATK-DLAM62LB development board is shown in the following figure. The TF-CARD interface is powered by VCC_3V3_MAIN, and the pull-up level of the MMC interface is controlled by VDDSHV_SD_IO led out from the core board.

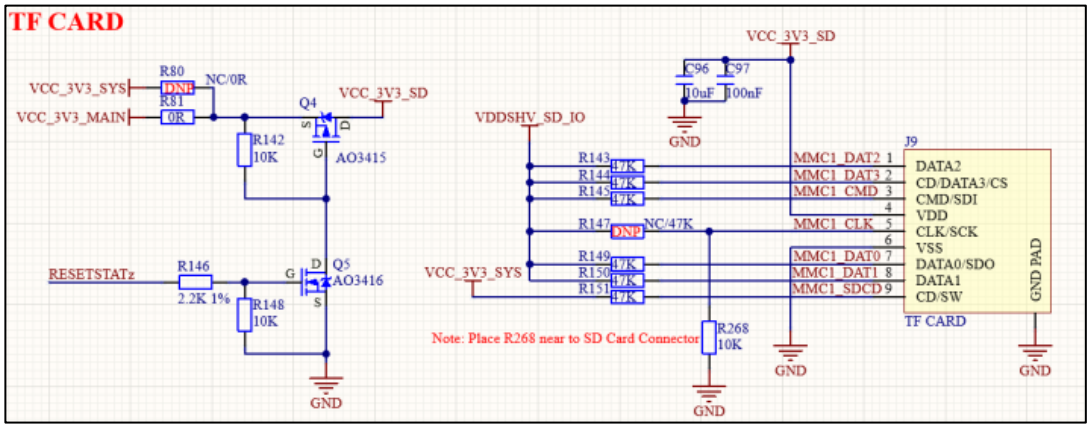

Figure 3.5-1 TF CARD Interface

In the diagram, TF_CARD is the TF card interface. The TF card is driven in 4-bit SDMMC mode, which is very suitable for scenarios requiring high-speed storage. MMC1_SDCD is the TF card detection pin, used to detect the insertion and removal of the TF card.

3.6 Design Notes

(1) The base board leads out the Micro SD interface via the MMC1 bus. During debugging, the SD card can be made into a Linux boot card for convenient debugging. In mass production, the SD card can also be used as a programming card to quickly program the system into eMMC. It is recommended to keep this interface in the base board design.

(2) The GPIO input voltage must not exceed the specified range, and the GPIO output current must not exceed the rated value. Inputs to non-GPIO ports shall comply with the chip datasheet specifications. ESD components and protection circuits shall be used when connecting to ports of other devices. For ports connected to high-interference devices, optocoupler isolation circuits shall be designed with attention to proper isolation layout.

(3) It is recommended to select the power supply scheme by referring to the base board power solution or the maximum power consumption parameters of the core board. When designing the base board, ensure that the base board powers on later than the core board to prevent current backflow from affecting system startup.

Chapter 4. Power Supply Voltages on the Core Board

If your custom-designed base board fails to boot, you can check whether the power supply voltages on the core board are normal. This method helps better determine whether the problem lies with the core board itself or your designed base board.

4.1 Voltages at Test Points of the BTB Core Board

On the BTB core board, the test voltage values for each test point have been marked next to the corresponding points. You can refer to the table below to understand the voltages at key test points when the core board is operating normally. This will assist you in troubleshooting and fault diagnosis.

Table 4.1.1 Voltages at Each Test Point of the Core Board

Test Item	Test Point	Voltage Value	Remarks
VCC_CORE	TP1	0.75V	
SOC_DVDD1V8	TP2	1.79V	
VDD1P8_PMIC	TP3	1.79V	
VDD_DDR4	TP4	1.20V	
VDDA1V8	TP5	1.79V	
DDR4_P2V5	TP6	2.49V	
VPP_1V8	TP7	0V	1.8V is present only when the eFUSE function is enabled; it is disabled by default.
SoC_DVDD3V3	TP8	3.31V	
VDDA_CORE	TP9	0.75V	

Voltages at Test Points of the BTB Core Board

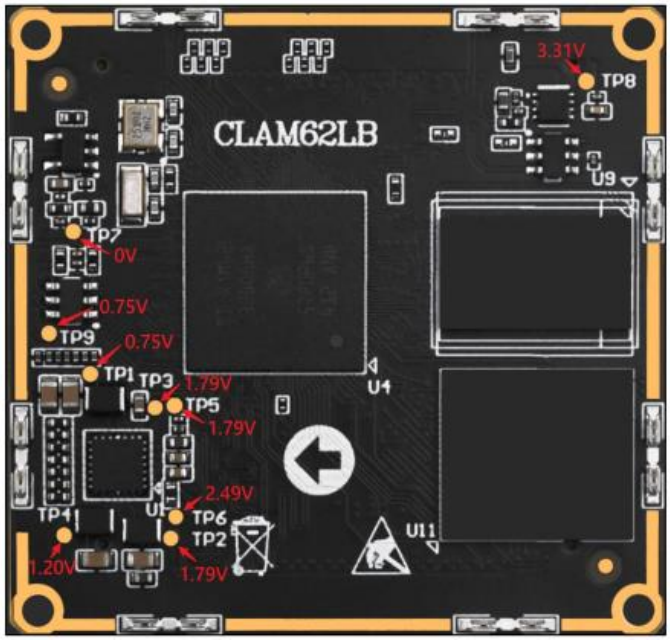

Figure 4.1-1 Test Point Voltage

Chapter 5. Precautions for Using the Core Board

Before users use the ATK-CLAM62LB core board for function verification and project development, please pay attention to the following items:

Precautions

- The ATK-CLAM62LB core board cannot work independently; it must be used with a base board to function properly. The factory system firmware and functional tests have been pre-programmed on the core board before shipment. After receiving the development board, users can perform functional and hardware tests by referring to the document *ATK-DLAM62LB Quick Start Guide* under the user manual in the cloud disk materials, to ensure the core board works normally.
- Before connecting the ATK-CLAM62LB core board to your custom product base board, you must test the reliability of the base board. Ensure that the power input to the core board is normal, there are no short circuits or cold solder joints on the base board, no current backflow from peripherals on the base board, and the logic levels of peripheral pins comply with the relevant power domains of the ATK-CLAM62LB core board, so as to guarantee normal circuit operation and effective soldering workmanship. Connecting the core board directly to your custom base board without prior testing may risk damaging the core board.
- It is recommended to install the ATK-CLAM62LB core board on the base board using compatible BTB connectors, standoffs and screws. Incompatible BTB connectors and standoffs may cause dimensional deviations, resulting in poor contact and affecting the normal operation of the core board.
- **DO NOT** hot-plug the core board or peripheral modules of the base board.
- Please read this manual and related development documents carefully before using the product, and pay attention to platform-specific instructions.
- Follow all instructions and warning information marked on the product.
- Use this product in a cool, dry and clean environment.
- Keep this product dry. If it is splashed or soaked by any liquid, disconnect power immediately and let it dry completely.
- Do not clean this product with organic solvents or corrosive liquids.
- Do not use or store this product in a dusty or dirty environment.
- If the product is not used for a long time, pack it properly to protect against moisture and dust.
- Ensure adequate ventilation and heat dissipation during use to avoid component damage caused by overheating during operation.
- Do not use this product in environments with frequent temperature changes to prevent component damage due to condensation.
- Do not handle the product roughly; dropping, knocking or violent shaking may damage circuits and components.
- Take strict anti-static precautions when using this product.
- Do not repair or disassemble our products by yourself. If the product malfunctions, please contact our company for maintenance in a timely manner.
- Unauthorized modification or use of unapproved accessories may damage this product, and such damage will not be covered under warranty.

Chapter 6. Common Causes of Core Board Damage

During the use and secondary development of the core board, special attention shall be paid to the damage of the on-board processor of the core board.

According to the statistics of core board damage cases in our company, the main causes include but are not limited to the following situations:

(1) Hot-plugging peripherals or external modules while powered on, resulting in damage to the on-board processor of the core board.

(2) During debugging, accidental contact with metal objects may cause electrical stress damage to I/O ports, or contact with board components may lead to an instantaneous short circuit to ground, which may damage the relevant circuits and the core board processor.

(3) Unreasonable factors in the design of a custom base board, such as voltage level mismatch, excessive load current, overshoot or undershoot, may cause damage to the on-board processor of the core board.

(4) During debugging, incorrect wiring when connecting peripheral interfaces, floating terminals touching other conductive materials, or wrong I/O wiring may cause electrical stress damage to the on-board processor of the core board.